Examples for the OneDown package*

www.ctan.org/pkg/onedown

J. Wiersma†

23 September 2018 (v0.5)

Introduction

This file (onedown-examples) contains (well, sort of includes) all the example files from the bundle. We use the 'include' mechanism of the package `subfiles`. This means that you can compile each example file as stand-alone, but they also form one document. The advantage is that you can copy one example file and edit it to your taste i.e. to experiment a little, and you can compile it without changing the preamble, provided the OneDown bundle is in your TEX-path.

For questions not covered in these examples or any further documentation, read the OneDown package manual named onedown.pdf.

If you encounter difficulties in compiling adapted files, then please read the section about active characters in the manual.

To make it easy for you to decide which file to experiment with, all sections bear the file name, which can also be found in the list below. The examples are produced using the tcolorbox package. This enables us to show the code and the output of it side by side.

List of Examples

1	Hands	2	7	Bidding	11	13 Legends	25
2	Suits	3	8	bidAll	16	14 Wrapping	28
3	showNS-warn-I	4	9	bidNS	18	15 Play	33
4	showNS-warn-II	5	10	bidEW	21	16 ExpertQuiz	35
5	showNS-align	7	11	bidNE	22	17 Languages	36
6	showAll	8	12	bidNW	23	18 Compass	37

*This file is part of the OneDown bundle. To generate this file, use the following command:

```
$ pdflatex onedown-examples.tex
```

†email: jack46@online.de

1 Hands

In the first example we show how the cards of a hand are entered. The hand can be displayed horizontally or vertically. It can also be centered. In general the token `*` will center the diagram, whereas the token `!` does something special. With the command `\hand` the token `*` switches between the horizontal and vertical mode. In other situations the token `*` can force the output of a short notation. With non-diagram commands the token `*` prints the full expression rather than an abreviation. The token `!` outputs the hand vertically. Please note that we enter a `T` to get e.g. J10 9. Entering `10` would yield J 1 09, which looks really awful.

single hand (hor/vert)+(left/centered) — **File: Hands**

```
 horizontal \par\noindent
\hand{AQT2}{KQ3}{J98}{T98}

 horizontal centered \par\noindent
\hand*{AQT2}{KQ3}{J98}{T98}

 vertical \par\noindent
\hand!{AQT2}{KQ3}{J98}{T98}

 vertical centered \par\noindent
\hand*!{AQT2}{KQ3}{J98}{T98}
```

horizontal
♠ A Q 10 2 ♥ K Q 3 ♦ J 9 8 ♣ 10 9 8
horizontal centered
♠ A Q 10 2 ♥ K Q 3 ♦ J 9 8 ♣ 10 9 8
vertical
♠ A Q 10 2
♥ K Q 3
♦ J 9 8
♣ 10 9 8
vertical centered
♠ A Q 10 2
♥ K Q 3
♦ J 9 8
♣ 10 9 8

This example shows how a mistake in entering the cards is detected.

single hand with error — **File: Hands**

```
\hand!{AQT2}{KKQ3}{J98}{T98}
```

Error: Hand has 14 cards
Error: Card ♥ K occurs 2 times
♠ A Q 10 2
♥ K K Q 3
♦ J 9 8
♣ 10 9 8

2 Suits

Here we show a single suit, with and without a suit symbol. You can observe the influence of changing the `gamefont`. In the 1st suit, card 4 occurs 2× and an error message is printed. In the last suit the same happens for card 5 but now the suit is known and is named in the error message.

suit and errors I — **File: Suits**

```
\suit{AKT544}\hspace{1cm}
\suit[\He]{AKT54}
\gamefont{\sffamily\bfseries\Large}
\par\vspace{1\baselineskip}\noindent
\suit{AKT54}\hspace{1cm}
\suit[\He]{AKT54}
\par\vspace{1\baselineskip}\noindent
\suit[\He]{AKT554}
```

Error: Card 4 occurs 2 times
A K 10 5 4 4 ♥ A K 10 5 4

A K 10 5 4 ♥ A K 10 5 4

Error: Card ♥5 occurs 2 times
♥ A K 10 5 5 4

In the 3rd diagram card 8 occurs 2×. In the 4th diagram card 4 is missing and a warning is raised. Card 5, which occurs 2×, raises an error. Errors are shown by default, warnings must be activated first. These consistency checks make it easy to spot typos in your diagrams.

suits and errors II — **File: Suits**

```
\resetfonts
\onesuitNS{AK53}{JT6}
\qquad
\onesuitEW{87}{Q952}
\qquad
\onesuitEW{87}{Q852}
\par\vspace{0.5\baselineskip}\noindent
\setdefaults{warn=on}
\onesuitAll{AK53}{JT6}{87}{Q952}
```

A K 5 3
J 10 6 **Q 9 5 2** **8 7**
Error: Card 8 occurs 2 times
Q 8 5 2 **8 7**

Warning: Card 4 fails
Error: Card 5 occurs 2 times
A K 5 3
Q 9 5 2 **8 7**
J 10 6

The other 'onesuit' diagrams, using a small box.

onesuitXX with box — **File: Suits**

```
\setdefaults{warn=off}
\onesuitNE{AK43}{87}
\qquad
\onesuitNE{AK43}{Q952}
```

A K 4 3 **8 7** **A K 4 3** **Q 9 5 2**

Next we show how to use a compass instead of a small box.

onesuitXX with compass — **File: Suits**

```
\onesuitNS!{AK53}{JT6}
\quad
\onesuitEW!{87}{Q952}
\quad
\onesuitNE!{AK43}{87}
\quad
\onesuitNE!{AK43}{Q952}
\quad
\onesuitAll!{AK43}{JT6}{87}{Q952}
```

A K 5 3
N W E S **Q 9 5 2** N W E S **8 7** **A K 4 3** N W E S **8 7**
J 10 6
A K 4 3
N W E S **Q 9 5 2** **Q 9 5 2** **A K 4 3** N W E S **8 7**
J 10 6

3 showNS-warn-I

If you do not define all cards of a deck, then a lot of 'missing card' warnings will appear. Therefore most of the time it is better that warnings are switched off. This is the default, but you can explicitly do that with `\setdefaults{warn=off}`. It is also the default to produce *error* messages, which you can also switch off with `\setdefaults{err=off}`. We recommend to have errors shown when you enter new diagrams. Please observe how the `\smaller\smaller` command shrinked the diagram. We did that to make all the warnings fit in the box. To avoid that all following diagrams are also shrinked you must call `\gamefont{\bfseries\sffamily}` again without the resizing. Calling `\resetfonts` has the same effect, but would also influence the other fonts.

showNS with warnings **File: showNS-warn-I**

```
\setdefaults{warn=on}
  \gamefont{\bfseries\sffamily%
            \smaller\smaller}
  \northhand{KJ92}{KQ9}{J}{AQJT8}
  \southhand{AQT85}{A52}{64}{K96}
  \showNS
```

Warning: Card ♠3 fails
Warning: Card ♠4 fails
Warning: Card ♠6 fails
Warning: Card ♠7 fails
Warning: Card ♥3 fails
Warning: Card ♥4 fails
Warning: Card ♥6 fails
Warning: Card ♥7 fails
Warning: Card ♥8 fails
Warning: Card ♥10 fails
Warning: Card ♥J fails
Warning: Card ♦2 fails
Warning: Card ♦3 fails
Warning: Card ♦5 fails
Warning: Card ♦7 fails
Warning: Card ♦8 fails
Warning: Card ♦9 fails
Warning: Card ♦10 fails
Warning: Card ♦Q fails
Warning: Card ♦K fails
Warning: Card ♦A fails
Warning: Card ♣2 fails
Warning: Card ♣3 fails
Warning: Card ♣4 fails
Warning: Card ♣5 fails
Warning: Card ♣7 fails

♠ K J 9 2
♥ K Q 9
♦ J
♣ A Q J 10 8

N
W E
S

♠ A Q 10 8 5
♥ A 5 2
♦ 6 4
♣ K 9 6

4 showNS-warn-II

In the previous example we enabled warnings and set a much smaller font to make the example fit on the page. As we compile these examples as one big file, OneDown remembers these values. If you compile this file (showNS-warn-II) standalone with `pdflatex showNS-warn-II` and view the result, then you'll see no warnings and no shrinking.

showNS **File: showNS-warn-II**

```
\northhand{KJ92}{KQ9}{J}{AQJT8}
\southhand{AQT85}{A52}{64}{K96}
\showNS
```

Warning: Card ♠3 fails
Warning: Card ♠4 fails
Warning: Card ♠6 fails
Warning: Card ♠7 fails
Warning: Card ♥3 fails
Warning: Card ♥4 fails
Warning: Card ♥6 fails
Warning: Card ♥7 fails
Warning: Card ♥8 fails
Warning: Card ♥10 fails
Warning: Card ♥J fails
Warning: Card ♦2 fails
Warning: Card ♦3 fails
Warning: Card ♦5 fails
Warning: Card ♦7 fails
Warning: Card ♦8 fails
Warning: Card ♦9 fails
Warning: Card ♦10 fails
Warning: Card ♦Q fails
Warning: Card ♦K fails
Warning: Card ♦A fails
Warning: Card ♣2 fails
Warning: Card ♣3 fails
Warning: Card ♣4 fails
Warning: Card ♣5 fails
Warning: Card ♣7 fails

♠ K J 9 2
♥ K Q 9
♦ J
♣ A Q J 10 8

N
W E
S

♠ A Q 10 8 5
♥ A 5 2
♦ 6 4
♣ K 9 6

Now warnings are switched off explicitly and the size is reset by calling `\resetfonts`.

showNS **File: showNS-warn-II**

```
\setdefaults{warn=off}
\resetfonts
\showNS
```

♠ K J 9 2
♥ K Q 9
♦ J
♣ A Q J 10 8

N
W E
S

♠ A Q 10 8 5
♥ A 5 2
♦ 6 4
♣ K 9 6

`\newgame` clears the hands. A hand with no cards at all is completelly suppressed, so we see only the compass. With `\setdefaults{compmid=text}` we can write 'text' in the middle of the compass. We enlarged the compass, so you can see that it *is* on the vertical line through the mids of **N** and **S**. With `\resetfonts` we return to the default values of the fonts. With `\setdefaults` one can influence the look of diagrams. In section `Compass` we'll go more into detail. Please note that `\setdefaults` has only 1 argument, It is *optional* and must be enclosed in brackets (`[...]`).

showNS **File: showNS-warn-II**

```
\newgame
\raggedright
\setdefaults{compmid=15}
\showNS
\showNS
\gamefont{\sffamily\bfseries\Huge}
\showNS
\resetfonts
\setdefaults{compmid=}
\showNS
\gamefont{\smaller\smaller}
\showNS
```

N W 15 E S N W 15 E S N W 15 E S N W E S N W E S

5 showNS-align

These examples show the alignment of diagrams. The alignment is given as an optional argument to the `showXX` commands. It bears the usual name for alignments: **t** for top, **b** for bottom and **c** for centered. Note that the `\smaller\smaller` from a previous example is still in effect: The command `\newgame` does not reset any font. Please note the difference between diagram 1 and 3. The font used for the suits is **not** the same.

showNS top algned — **File: showNS-align**

```
\newgame
\northhand{KJ92}{KQ9}{J}{AQJT8}
\southhand{AQT85}{A52}{64}{K96}
A \showNS[t] B
\resetfonts
C \showNS[t] D
\gamefont{\sffamily\bfseries\smaller\smaller}
E \showNS[t] F
```

A ♠ K J 9 2 B C ♠ **K J 9 2** D E ♠ **K J 9 2** F
♥ K Q 9 ♥ **K Q 9** ♥ **K Q 9**
♦ J ♦ **J** ♦ **J**
♣ A Q J 10 8 ♣ **A Q J 10 8** ♣ **A Q J 10 8**
N W E S
♠ A Q 10 8 5 ♥ A 5 2 ♦ 6 4 ♣ K 9 6
N W E S
♠ **A Q 10 8 5** ♥ **A 5 2** ♦ **6 4** ♣ **K 9 6**
N W E S
♠ **A Q 10 8 5** ♥ **A 5 2** ♦ **6 4** ♣ **K 9 6**

We do need to call `\resetfonts` (or `\gamefont`) explicitly to reset the font or size.

showNS center aligned — **File: showNS-align**

```
\resetfonts
% \gamefont would do the job as well
%\gamefont{\bfseries\sffamily}
A \showNS[c] B
```

♠ **K J 9 2**
♥ **K Q 9**
♦ **J**
♣ **A Q J 10 8**

A N W E S B

♠ **A Q 10 8 5**
♥ **A 5 2**
♦ **6 4**
♣ **K 9 6**

showNS bottom aligned — **File: showNS-align**

```
A \showNS[b] B
```

♠ **K J 9 2**
♥ **K Q 9**
♦ **J**
♣ **A Q J 10 8**

N W E S

♠ **A Q 10 8 5**
♥ **A 5 2**
♦ **6 4**
A ♣ **K 9 6** B

6 showAll

\showAll displays a card diagram with the 4 hands. Here the **East** hand is empty and is skipped completely from the diagram. If you want to show an empty suit explicitly (which is a good thing), just use a single hyphen. OneDown will make an en-dash out of it. We added the dealer and vulnerability to the diagram, the value of which was calculated automatically from the given boardnumber(18). Please note that the vulnerable side is printed in red and that the dealer is underlined in the compass. With \setdefaults{compmid=\boardtext} we write the board number as mid text in the compass. If given this way, it will always print the *actual* board number, as you can see in the following examples.

showBoardNr — **File: showAll**

```
\setdefaults{compmid=\boardtext}
\northhand{AJ}{K}{-}{-}
\southhand{32}{-}{A}{-}
\easthand{}{}{}{}
\westhand{KQ}{A}{-}{-}
\boardnr{18}
\leftupper{\dealertext}{}{\vulnertext}
\showAll
```

Dealer: E
Vulnerable: N–S

♠ A J
♥ K
♦ –
♣ –

♠ K Q
♥ A
♦ –
♣ –

N
W 18 E
S

♠ 3 2
♥ –
♦ A
♣ –

This example shows how to add several conditions, such as declarer, lead etc. to a diagram. \boardtext just prints the plain board number and was called in \setdefault[compmid=\boardtext] (rather than using the hard-coded number) to set it in the middle of the compass. In \leftupper we use \boardtext* to print the boardnumber behind an additional text.

You will have noticed that the right upper text does not fit well in the diagram: it collides with the **North** hand...

Board Number — **File: showAll**

```
\boardnr{19}
\northhand{AK43}{AQJ83}{AJ98}{-}
\southhand{87}{T5}{QT5}{K98654}
\easthand{JT6}{764}{K43}{JT32}
\westhand{Q952}{K92}{762}{AQ7}
\leftupper{\boardtext*}%
  {\dealertext}{\vulnertext}
\rightupper{\contract: 3\,\NT}{\declarer
    \south}{}
\rightlower{\lead: \Di 7}{}{}
\showAll*
```

Board: 19
Dealer: S
Vulnerable: E–W

♠ A K 4 3
♥ A Q J 8 3
♦ A J 9 8
♣ –

Contract: 3 NT
Declarer South

♠ Q 9 5 2
♥ K 9 2
♦ 7 6 2
♣ A Q 7

N
W 19 E
S

♠ J 10 6
♥ 7 6 4
♦ K 4 3
♣ J 10 3 2

♠ 8 7
♥ 10 5
♦ Q 10 5
♣ K 9 8 6 5 4

Lead: ♦7

...so we add some (here 2ex) offset, to shift the text a bit to the right. One can shift the upper/lower and left/right texts independently. A positive offset shifts away from the compass, a negative offset would shift the text towards the compass.

Board Number — **File: showAll**

```
\boardnr{20}
\northhand{AK43}{AQJ83}{AJ98}{-}
\southhand{87}{T5}{QT5}{K98654}
\easthand{JT6}{764}{K43}{JT32}
\westhand{Q952}{K92}{762}{AQ7}
\leftupper{\boardtext*}%
  {\dealertext}{\vulnertext}
\rightupper[2ex]{\contract:
    3\,\NT}{\declarer \south}{}
\rightlower{\lead: \Di 7}{}{}
\showAll*
```

Board: 20
Dealer: W
Vulnerable: All

♠ A K 4 3
♥ A Q J 8 3
♦ A J 9 8
♣ –

Contract: 3 NT
Declarer South

♠ Q 9 5 2
♥ K 9 2
♦ 7 6 2
♣ A Q 7

N
W 20 E
S

♠ J 10 6
♥ 7 6 4
♦ K 4 3
♣ J 10 3 2

♠ 8 7
♥ 10 5
♦ Q 10 5
♣ K 9 8 6 5 4

Lead: ♦7

Please note that the board number in the middle of the compass has been updated each time that we called `\boardnr`. More important however, is to see that the very long suit of the **North** hand collides massively with the right upper condition text. Shifting the text wouldn't help here.

Very long suits 1 — **File: showAll**

```
\boardnr{21}
\northhand{AKQJT98765432}{-}{-}{-}
\southhand{-}{2}{2}{AKQJT987654}
\easthand{-}{876543}{876543}{3}
\westhand{-}{AKQJT9}{AKQJT9}{2}
\showAll
```

Board: 21
Dealer: N
Vulnerable: N–S

♠ A K Q J 10 9 8 7 6 5 4 3 2
♥ –
♦ –
♣ –

Contract: 7 NT
Declarer South

♠ –
♥ A K Q J 10 9
♦ A K Q J 10 9
♣ 2

N
W 21 E
S

♠ –
♥ 8 7 6 5 4 3
♦ 8 7 6 5 4 3
♣ 3

♠ –
♥ 2
♦ 2
♣ A K Q J 10 9 8 7 6 5 4

Lead: ♦7

A simple way to 'correct' this is by lowering the text: leave the first line of the right-upper text empty.

Correction by lowering the text — **File: showAll**

```
\rightupper{}{\contract: 3\,\NT}{\declarer
    \south}
\northhand{AKQJT98765432}{-}{-}{-}
\southhand{-}{2}{2}{AKQJT987654}
\easthand{-}{876543}{876543}{3}
\westhand{-}{AKQJT9}{AKQJT9}{2}
\showAll
```

Board: 21
Dealer: N
Vulnerable: N–S

Contract: 3 NT
Declarer South

♠ A K Q J 10 9 8 7 6 5 4 3 2
♥ –
♦ –
♣ –

♠ –
♥ A K Q J 10 9
♦ A K Q J 10 9
♣ 2

N / W 21 E / S

♠ –
♥ 8 7 6 5 4 3
♦ 8 7 6 5 4 3
♣ 3

♠ –
♥ 2
♦ 2
♣ A K Q J 10 9 8 7 6 5 4

Lead: ♦7

Another problem with (very) long suits, is that the **East–West** hands can seem too close to a **North–South** hand, as can be seen in next example. Of course the hands are not any closer to each other as before, but the long suit in the unfavourable position make it clearly look so.

Very long suits 2 — **File: showAll**

```
\rightupper{\contract: 3\,\NT}{\declarer
    \south}{}
\northhand{-}{2}{2}{AKQJT987654}
\southhand{AKQJT98765432}{-}{-}{-}
\easthand{-}{876543}{876543}{3}
\westhand{-}{AKQJT9}{AKQJT9}{2}
\rightlower{}{\lead: \Di 7}{}
\showAll
```

Board: 21
Dealer: N
Vulnerable: N–S

Contract: 3 NT
Declarer South

♠ –
♥ 2
♦ 2
♣ A K Q J 10 9 8 7 6 5 4

♠ –
♥ A K Q J 10 9
♦ A K Q J 10 9
♣ 2

N / W 21 E / S

♠ –
♥ 8 7 6 5 4 3
♦ 8 7 6 5 4 3
♣ 3

♠ A K Q J 10 9 8 7 6 5 4 3 2
♥ –
♦ –
♣ –

Lead: ♦7

The solution is to add some offset. In a previous example we already showed how to use an offset with an annotation. Here we add an offset to the apropriate *hand*. This is done with the optional parameter in the **North** and the **South** hand. The **North** hand shifts upwards, the **South** hand downwards. As a little demonstration, we also shifted the **East** hand a bit to the right and the **West** hand a bit to the left. Negative offset values reverse the shift direction.

Very long suits 3 with extra offset — **File: showAll**

```
\northhand[1em]{-}{2}{2}%
    {AKQJT987654}
\southhand[1em]{AKQJT98765432}%
    {-}{-}{-}
\easthand[1em]{-}{876543}%
    {876543}{3}
\westhand[1em]{-}{AKQJT9}%
    {AKQJT9}{2}
\showAll
```

Board: 21
Dealer: N
Vulnerable: N–S

Contract: 3 NT
Declarer South

♠ –
♥ 2
♦ 2
♣ A K Q J 10 9 8 7 6 5 4

♠ –
♥ A K Q J 10 9
♦ A K Q J 10 9
♣ 2

N / W 21 E / S

♠ –
♥ 8 7 6 5 4 3
♦ 8 7 6 5 4 3
♣ 3

♠ A K Q J 10 9 8 7 6 5 4 3 2
♥ –
♦ –
♣ –

Lead: ♦7

7 Bidding

The first diagram reflects the default: the first column is for **West**, full names are shown, the alignment is **c** and the long form is used: The lowercase `p` yields **Pass** and an uppercase `P` yields **All pass**. `X` yields **Double** and `R` yields **ReDouble**. One can use 'mixed-mode' for the entries in the table: both the abreviation `C` or the command `\Cl` for clubs are possible. OneDown takes care of the spacing between the rank and the nomination, so you do not have to fiddle around with `\thinspace`, `\,` or the like.

In the second diagram we use the short form of the non-bid calls, by calling `\setdefaults{bidlong=off}`. The alignment is **t** and we have put **North** in the first column.

In the third diagram we also use the short form for the table header by calling the bidding table with the token `!`. The alignment is **b**.

bidding, alignment and long/short forms — **File: Bidding**

```
%\gamefont{\smaller\smaller}
A
\begin{bidding}% default= [c]
1\Cl & 1D & 1H & 1S \\
1N & X  & p  & p \\
R  & P   \\
\end{bidding}
B
\\[2\baselineskip]
A
\setdefaults{bidlong=off,bidfirst=N}
\begin{bidding}[t]
1C & 1D & 1H & 1S \\
1N & X  & p  & p \\
R  & P \\
\end{bidding}
B
\\[2\baselineskip]
A
\setdefaults{bidlong=off}
\begin{bidding}![b]
1C & 1D & 1H & 1S \\
1N & X  & p  & p \\
R  & p  & p  & p \\
\end{bidding}
B
```

A

West	North	East	South
1♣	1♦	1♥	1♠
1NT	Double	Pass	Pass
ReDouble	All pass		

B

A

North	East	South	West
1♣	1♦	1♥	1♠
1NT	X	p	p
XX	AP		

B

A

N	E	S	W
1♣	1♦	1♥	1♠
1NT	X	p	p
XX	p	p	p

B

We now show bidding diagrams with the real names of the players. In every of the four diagrams we have a different first column. Please observe that the association of the individuals with the **North**, **East** etc. direction is preserved.

bidding, names and first column **File: Bidding**

```
\namesNS{Jan}{Joris}
\namesEW{Piet}{Corneel}
\setdefaults{bidfirst=N}
\begin{bidding}
1S & p & 3C & p\\
3D & p & 3H & p\\
3S & p & p  & p\\
\end{bidding}
\par\hrulefill\par
\setdefaults{bidfirst=E}
\begin{bidding}
1S & p & 3C & p\\
3D & p & 3H & p\\
3S & p & p  & p\\
\end{bidding}
\par\hrulefill\par
\setdefaults{bidfirst=S}
\begin{bidding}
1S & p & 3C & p\\
3D & p & 3H & p\\
3S & p & p  & p\\
\end{bidding}
\par\hrulefill\par
\setdefaults{bidfirst=W}
\begin{bidding}
1S & p & 3C & p\\
3D & p & 3H & p\\
3S & p & p  & p\\
\end{bidding}
```

North	East	South	West
Jan	*Piet*	*Joris*	*Corneel*
1♠	p	3♣	p
3♦	p	3♥	p
3♠	p	p	p

East	South	West	North
Piet	*Joris*	*Corneel*	*Jan*
1♠	p	3♣	p
3♦	p	3♥	p
3♠	p	p	p

South	West	North	East
Joris	*Corneel*	*Jan*	*Piet*
1♠	p	3♣	p
3♦	p	3♥	p
3♠	p	p	p

West	North	East	South
Corneel	*Jan*	*Piet*	*Joris*
1♠	p	3♣	p
3♦	p	3♥	p
3♠	p	p	p

Here we show the bidding diagram for only 2 bidders, with 4 different first columns. Observe that also here the real names stay in connection with their directions.

biddingpairs, names and first column **File: Bidding**

```
\namesNS{Jan}{Piet}
\namesEW{Joris}{Corneel}
\setdefaults{bidfirst=N}
\begin{biddingpair}
1S & 3C \\
3D & 3H \\
3S & p  \\
\end{biddingpair}
\par\hrulefill\par
\setdefaults{bidfirst=E}
\begin{biddingpair}
1S & 3C \\
3D & 3H \\
3S & p  \\
\end{biddingpair}
\par\hrulefill\par
\setdefaults{bidfirst=S}
\begin{biddingpair}
1S & 3C \\
3D & 3H \\
3S & p  \\
\end{biddingpair}
\par\hrulefill\par
\setdefaults{bidfirst=W}
\begin{biddingpair}
1S & 3C \\
3D & 3H \\
3S & p  \\
\end{biddingpair}
```

North	South
Jan	*Piet*
1♠	3♣
3♦	3♥
3♠	p

East	West
Joris	*Corneel*
1♠	3♣
3♦	3♥
3♠	p

South	North
Piet	*Jan*
1♠	3♣
3♦	3♥
3♠	p

West	East
Corneel	*Joris*
1♠	3♣
3♦	3♥
3♠	p

The next example shows how one can put a marker to a call with `\markit` and refer to it with by calling `\explainit`. These explanations must appear in the optional argument of the bidding table. You yourself are responsible that the order in which they appear corresponds with the order of the markers. The explanations are typeset like a footnote mechanism below the table and they will never extend beyond the right edge of the table, as you can see in the 2nd diagram. The width in a biddingpair table is even more limited, that's the reason why we use raggedright to obtain a result that is typographically acceptable. The last diagram shows that we can get an annotation without the need for `\markit` or `\explainit`.

bidding with (very long) annotation **File: Bidding**

```
\begin{bidding}(%
  \explainit{Bergen}
  \explainit{How strong?}
  \explainit{Minimum hand})
1\Sp      & p & 3C\markit & p\\
3D\markit & p & 3H\markit & p\\
3S        & p & p         & p\\
\end{bidding}
\par\vspace{2\baselineskip}\noindent
\begin{bidding}(%
  \explainit{Here we have a very very
             long annotation that does
             not fit on one line})
1\Sp      & p & 3C\markit & p\\
\end{bidding}
\par\vspace{2\baselineskip}\noindent
\begin{biddingpair}(%
  \explainit{Here we have a very very
             long annotation that does
             not fit on one line})
1S    & 3C\markit \\
\end{biddingpair}
\qquad
\begin{biddingpair}(%
  no explain/markit here but still an
    annotation)
1S    & 3C \\
\end{biddingpair}
```

West	North	East	South
Corneel	*Jan*	*Joris*	*Piet*
1♠	p	3♣[a]	p
3♦[b]	p	3♥[c]	p
3♠	p	p	p

[a] Bergen [b] How strong? [c] Minimum hand

West	North	East	South
Corneel	*Jan*	*Joris*	*Piet*
1♠	p	3♣[a]	p

[a] Here we have a very very long annotation that does not fit on one line

West	East
Corneel	*Joris*
1♠	3♣[a]

[a] Here we have a very very long annotation that does not fit on one line

West	East
Corneel	*Joris*
1♠	3♣

no explain/markit here but still an annotation

In this examples we'll change some fonts to see what it accomplishes.
By default the bidderfont is `\mdseries\sffamily` and the namefont is `\mdseries\slshape`, as you can clearly see in the header of the bidding diagram.

- `\gamefont{...\Large}` enlarges everything, also where other fonts are active, e.g. in the header. (1st diagram)
- `\scalefont` scales all fonts, not only the `\gamefont` controlled stuff. (2nd diagram)
- If you change only the *size* of e.g. the `\namefont`, without giving a font description, you 'lose the font' and the current font will be used instead of `namefont`. In diagrams most of the time this will be the `gamefont`. (3rd diagram)

We also used `\setdefaults{bidline=1}` to separate the header of the bidding table from the bidding sequence with a `\hline`.

Same but with changed font — **File: Bidding**

```
\gamefont{\sffamily\bfseries\Large}
\setdefaults{bidline=1}
\begin{bidding}[c](\explainit{Bergen})
1S        & p & 3C\markit & p\\
3D        & p & 3H        & p\\
3S        & p & p         & p\\
\end{bidding}

\gamefont{\sffamily\bfseries\normalsize}
\gamefont{\sffamily\scalefont{2}}
\begin{biddingpair}[c]%
  (\explainit{Bergen})
1S  & 3C\markit \\
3D  & 3H        \\
3S  & p         \\
\end{biddingpair}

\gamefont{\sffamily\bfseries\normalsize}
\namefont{\smaller}
\begin{bidding}(\explainit{Bergen})
1S        & p & 3C\markit & p\\
3D        & p & 3H        & p\\
3S        & p & p         & p\\
\end{bidding}
\setdefaults{bidline=off}
```

West	North	East	South
Corneel	*Jan*	*Joris*	*Piet*
1♠	p	3♣[a]	p
3♦	p	3♥	p
3♠	p	p	p

[a] Bergen

West	East
Corneel	*Joris*
1♠	3♣[a]
3♦	3♥
3♠	p

[a] Bergen

West	North	East	South
Corneel	Jan	Joris	Piet
1♠	p	3♣[a]	p
3♦	p	3♥	p
3♠	p	p	p

[a] Bergen

Normally one uses shorthands in bidding tables. We already showed that one can use macros calls like `\Cl`. If a macro uses tokens, or if a shorthand appears as argument of another macro, one has to be careful. Note that the first entry (`\frame{2H}`) of row 2 does not produce the correct result, but `{\frame{2\He}}` does: We have to enclose these specials in braces (`{...}`) and not use the shorthand notation.

Special effects — **File: Bidding**

```
\namesNS{}{}\namesEW{}{}
\begin{bidding}
p             & X               & R & P \\
{\frame{2H}} & {\frame{2\He}} &
{\textit{R}} & {\textit{\redouble}} \\
{\Pass*!}    & {\Redouble*!} & \Allpass\\
\end{bidding}
```

West	North	East	South
p	X	XX	AP
2H	2♥	*R*	*ReDouble*
P	ReDbl	all pass	

8 bidAll

Here is a diagram with four hands. We get rid of the past by calling `\newgame`. Then we define our hands and set the first bid column to **South** and we show only one pair of bidders. Because the bidding table does not fit on the same line, it appears below the compass. (In fact it actually would fit on the line. But to illustrate the point we used `\handskip` to widen the diagram a bit). Note that the token `-` in the `bidding` environment suppresses the output of it. Only when calling `\showAll+` (with a `+` token), the saved bidding diagram is printed with the card diagram.

not fitting on the line — **File: bidAll**

```
\newgame
\handskip{2em}
\northhand{KJ82}{KQ9}{J32}{JT8}
\southhand{AQ953}{A85}{Q84}{K6}
\easthand{T6}{764}{KT9}{Q5432}
\westhand{74}{JT32}{A765}{A97}
\setdefaults{bidfirst=S}
\begin{biddingpair}-
1S & 4S \\
p &  \\
\end{biddingpair}
\showAll+
```

♠ K J 8 2
♥ K Q 9
♦ J 3 2
♣ J 10 8

♠ 7 4
♥ J 10 3 2
♦ A 7 6 5
♣ A 9 7

N / W E / S

♠ 10 6
♥ 7 6 4
♦ K 10 9
♣ Q 5 4 3 2

♠ A Q 9 5 3
♥ A 8 5
♦ Q 8 4
♣ K 6

South	North
1♠	4♠
p	

Here the hands and the bidding are the same, but the complete diagram (biddingtable inclusive) is centered and we use the short notation for the players in the bidding table. Being shorter now, the bidding table does fit on the same line.

centered and fitting — **File: bidAll**

```
\setdefaults{bidfirst=S}
\begin{biddingpair}!-
1S & 4S \\
p &  \\
\end{biddingpair}
\showAll*+
```

♠ K J 8 2
♥ K Q 9
♦ J 3 2
♣ J 10 8

♠ 7 4
♥ J 10 3 2
♦ A 7 6 5
♣ A 9 7

N / W E / S

♠ 10 6
♥ 7 6 4
♦ K 10 9
♣ Q 5 4 3 2

S	N
1♠	4♠
p	

♠ A Q 9 5 3
♥ A 8 5
♦ Q 8 4
♣ K 6

The same deal, but now we show all bidders in the bidding table. Again it is to wide to fit on the line.

left aligned **File: bidAll**

```
\begin{bidding}-(\explainit{15-17\lpts})
p & p  & P & 1S \\
p & 2C & {\Pass*!} & 2N\markit \\
p & 3N & {\Allpass!} \\
\end{bidding}
\showAll+
```

♠ K J 8 2
♥ K Q 9
♦ J 3 2
♣ J 10 8

♠ 7 4
♥ J 10 3 2
♦ A 7 6 5
♣ A 9 7

N
W E
S

♠ 10 6
♥ 7 6 4
♦ K 10 9
♣ Q 5 4 3 2

♠ A Q 9 5 3
♥ A 8 5
♦ Q 8 4
♣ K 6

South	West	North	East
p	p	AP	1♠
p	2♣	P	2NT[a]
p	3NT	ap	

[a] 15-17length points

Finally the same, but the diagram is centered. We also set the extra handskip to 0 again.

centered **File: bidAll**

```
\handskip{0em}
\showAll*+
```

♠ K J 8 2
♥ K Q 9
♦ J 3 2
♣ J 10 8

♠ 7 4
♥ J 10 3 2
♦ A 7 6 5
♣ A 9 7

N
W E
S

♠ 10 6
♥ 7 6 4
♦ K 10 9
♣ Q 5 4 3 2

♠ A Q 9 5 3
♥ A 8 5
♦ Q 8 4
♣ K 6

South	West	North	East
p	p	AP	1♠
p	2♣	P	2NT[a]
p	3NT	ap	

[a] 15-17length points

9 bidNS

We show a couple of diagram without comment, with the exception of number 4.

1: showNS pair — File: bidNS

```
\newgame
\northhand{KJ82}{KQ9}{J}{AQJT8}
\southhand{AQT95}{A52}{864}{K6}
\easthand{JT6}{764}{KT9}{JT32}
\westhand{Q952}{K32}{765}{AQ7}
\setdefaults{bidfirst=S}
\begin{biddingpair}-(\explainit{splinter})
1S & 4D\markit \\
4H & 6S \\
\end{biddingpair}
\showNS+
```

♠ K J 8 2
♥ K Q 9
♦ J
♣ A Q J 10 8

N / W E / S

♠ A Q 10 9 5
♥ A 5 2
♦ 8 6 4
♣ K 6

South	North
1♠	4♦[a]
4♥	6♠

[a] splinter

2: showNS pair centered — File: bidNS

```
\begin{biddingpair}!-(\explainit{splinter})
1S & 4D\markit \\
4H & 6S \\
\end{biddingpair}
\showNS*+
```

♠ K J 8 2
♥ K Q 9
♦ J
♣ A Q J 10 8

N / W E / S

♠ A Q 10 9 5
♥ A 5 2
♦ 8 6 4
♣ K 6

S	N
1♠	4♦[a]
4♥	6♠

[a] splinter

3: showNS — File: bidNS

```
\begin{bidding}!-(\explainit{splinter}
\explainit{control})
1S        & p & 4D\markit & p \\
4H\markit & p & 6S        & p \\
\end{bidding}
\showNS+
```

♠ K J 8 2
♥ K Q 9
♦ J
♣ A Q J 10 8

N / W E / S

♠ A Q 10 9 5
♥ A 5 2
♦ 8 6 4
♣ K 6

S	W	N	E
1♠	p	4♦[a]	p
4♥[b]	p	6♠	p

[a] splinter [b] control

Here we show the influence of command `\handskip`, that adds some extra space between the card diagram and the bidding diagram. In the 2nd diagram the negative value diminishes the distance. Because it is within braces, the length change is local and the normal value is automatically restored afterwards. In the 4th diagram we add `3em` extra space

4: showNS centered **File: bidNS**

```
\showNS*+
{\handskip{-1em}\showNS*+}
\showNS*+
{\handskip{3em}\showNS*+}
```

♠ K J 8 2
♥ K Q 9
♦ J
♣ A Q J 10 8

N
W E
S

S	W	N	E
1♠	p	4♦[a]	p
4♥[b]	p	6♠	p

[a] splinter [b] control

♠ A Q 10 9 5
♥ A 5 2
♦ 8 6 4
♣ K 6

♠ K J 8 2
♥ K Q 9
♦ J
♣ A Q J 10 8

N
W E
S

S	W	N	E
1♠	p	4♦[a]	p
4♥[b]	p	6♠	p

[a] splinter [b] control

♠ A Q 10 9 5
♥ A 5 2
♦ 8 6 4
♣ K 6

♠ K J 8 2
♥ K Q 9
♦ J
♣ A Q J 10 8

N
W E
S

S	W	N	E
1♠	p	4♦[a]	p
4♥[b]	p	6♠	p

[a] splinter [b] control

♠ A Q 10 9 5
♥ A 5 2
♦ 8 6 4
♣ K 6

♠ K J 8 2
♥ K Q 9
♦ J
♣ A Q J 10 8

N
W E
S

S	W	N	E
1♠	p	4♦[a]	p
4♥[b]	p	6♠	p

[a] splinter [b] control

♠ A Q 10 9 5
♥ A 5 2
♦ 8 6 4
♣ K 6

5: showNS pair — File: bidNS

```
\gamefont{\sffamily\bfseries\scriptsize}
\begin{biddingpair}!-
1S & 4D \\
4H & 6S \\
\end{biddingpair}
\showNS+
```

♠ K J 8 2
♥ K Q 9
♦ J
♣ A Q J 10 8

N / W E / S

S	N
1♠	4♦
4♥	6♠

♠ A Q 10 9 5
♥ A 5 2
♦ 8 6 4
♣ K 6

Because the previously saved bidding diagram is used, setting `bidfirst` has no influence on the output...

6: showNS pair centered — File: bidNS

```
\setdefaults{bidfirst=W}
\showNS*+
```

♠ K J 8 2
♥ K Q 9
♦ J
♣ A Q J 10 8

N / W E / S

S	N
1♠	4♦
4♥	6♠

♠ A Q 10 9 5
♥ A 5 2
♦ 8 6 4
♣ K 6

...But when setting the next bidding diagram, it has!

7: showNS — File: bidNS

```
\begin{bidding}-(\explainit{splinter}
\explainit{control})
1S        & p & 4D\markit & p \\
4H\markit & p & 6S        & p \\
\end{bidding}
\showNS+
```

♠ K J 8 2
♥ K Q 9
♦ J
♣ A Q J 10 8

N / W E / S

West	North	East	South
1♠	p	4♦[a]	p
4♥[b]	p	6♠	p

[a] splinter [b] control

♠ A Q 10 9 5
♥ A 5 2
♦ 8 6 4
♣ K 6

8: showNS centered — File: bidNS

```
\showNS*+
```

♠ K J 8 2
♥ K Q 9
♦ J
♣ A Q J 10 8

N / W E / S

West	North	East	South
1♠	p	4♦[a]	p
4♥[b]	p	6♠	p

[a] splinter [b] control

♠ A Q 10 9 5
♥ A 5 2
♦ 8 6 4
♣ K 6

10 bidEW

In the previous example we changed the gamefont to scriptsize, which is still in effect here, as you can see in this example. You wonder why the bidding is shown for **North** and **South**, but the hands are those of **East** and **West**? Well, if you say `\showEW` you get the **East–West** hands. And if you say `\setdefaults{bidfirst=S}`, then the first column is of **South**! (BTW: if you want to get **South**! as output, you must write `\south{}!`, then `\south!` and even `\south !` will regard the `!` as a token to `\south` and will produce **S**).

We reset the gamefont before we draw the 2nd diagram. Please note that we have to redefine the bidding. The saved version from the 1st diagram will not change its font!

bidEWpair — **File: bidEW**

```
\northhand{KJ82}{KQ9}{J}{AQJT8}
\southhand{AQT95}{A52}{864}{K6}
\easthand{63}{J764}{KQT9}{953}
\westhand{74}{T83}{A7532}{742}
\setdefaults{bidfirst=S,bidlong=off}
\begin{biddingpair}!-(\explainit{splinter}
  \explainit{control})
1S        & 4D\markit \\
4H\markit & 6S \\
\end{biddingpair}
\showEW+
\gamefont{\sffamily\bfseries\normalsize}
\par\vspace{1\baselineskip}
\showEW+
\begin{biddingpair}!-(\explainit{splinter}
  \explainit{control})
1S        & 4D\markit \\
4H\markit & 6S \\
\end{biddingpair}
\par\vspace{1\baselineskip}
\showEW+
```

♠ 7 4
♥ 10 8 3
♦ A 7 5 3 2
♣ 7 4 2

N W E S

♠ 6 3
♥ J 7 6 4
♦ K Q 10 9
♣ 9 5 3

S	N
1♠	4♦[a]
4♥[b]	6♠

[a] splinter
[b] control

♠ 7 4
♥ 10 8 3
♦ A 7 5 3 2
♣ 7 4 2

N W E S

♠ 6 3
♥ J 7 6 4
♦ K Q 10 9
♣ 9 5 3

S	N
1♠	4♦[a]
4♥[b]	6♠

[a] splinter
[b] control

♠ 7 4
♥ 10 8 3
♦ A 7 5 3 2
♣ 7 4 2

N W E S

♠ 6 3
♥ J 7 6 4
♦ K Q 10 9
♣ 9 5 3

S	N
1♠	4♦[a]
4♥[b]	6♠

[a] splinter
[b] control

bidEWpair centered — **File: bidEW**

```
\showAll+

\showEW*+
```

♠ K J 8 2
♥ K Q 9
♦ J
♣ A Q J 10 8

♠ 7 4
♥ 10 8 3
♦ A 7 5 3 2
♣ 7 4 2

N W E S

♠ 6 3
♥ J 7 6 4
♦ K Q 10 9
♣ 9 5 3

♠ A Q 10 9 5
♥ A 5 2
♦ 8 6 4
♣ K 6

S	N
1♠	4♦[a]
4♥[b]	6♠

[a] splinter
[b] control

♠ 7 4
♥ 10 8 3
♦ A 7 5 3 2
♣ 7 4 2

N W E S

♠ 6 3
♥ J 7 6 4
♦ K Q 10 9
♣ 9 5 3

S	N
1♠	4♦[a]
4♥[b]	6♠

[a] splinter
[b] control

11 bidNE

Here we show some examples without comment.

showNE — File: bidNE

```
\northhand{KJ82}{KQ9}{J}{AQJT8}
\southhand{AQT95}{A52}{864}{K6}
\easthand{63}{J764}{KQT9}{432}
\westhand{74}{T83}{A7532}{957}
\gamefont{\sffamily\bfseries\large}
\begin{biddingpair}!-(\explainit{splinter}
  \explainit{control})
1S        & 4D\markit \\
4H\markit & 6S \\
\end{biddingpair}

\showNE+
```

♠ K J 8 2
♥ K Q 9
♦ J
♣ A Q J 10 8

N W E S

♠ 6 3
♥ J 7 6 4
♦ K Q 10 9
♣ 4 3 2

S	N
1♠	4♦[a]
4♥[b]	6♠

[a] splinter
[b] control

showNE centered — File: bidNE

```
\showNE*+
```

♠ K J 8 2
♥ K Q 9
♦ J
♣ A Q J 10 8

N W E S

♠ 6 3
♥ J 7 6 4
♦ K Q 10 9
♣ 4 3 2

S	N
1♠	4♦[a]
4♥[b]	6♠

[a] splinter
[b] control

showNE — File: bidNE

```
\begin{bidding}!-(\explainit{splinter}
\explainit{control})
1S        & p & 4D\markit & p \\
4H\markit & p & 6S        & p \\
\end{bidding}
\showNE+
```

♠ K J 8 2
♥ K Q 9
♦ J
♣ A Q J 10 8

N W E S

♠ 6 3
♥ J 7 6 4
♦ K Q 10 9
♣ 4 3 2

S	W	N	E
1♠	p	4♦[a]	p
4♥[b]	p	6♠	p

[a] splinter [b] control

showNE centered — File: bidNE

```
\showNE*+
```

♠ K J 8 2
♥ K Q 9
♦ J
♣ A Q J 10 8

N W E S

♠ 6 3
♥ J 7 6 4
♦ K Q 10 9
♣ 4 3 2

S	W	N	E
1♠	p	4♦[a]	p
4♥[b]	p	6♠	p

[a] splinter [b] control

12 bidNW

showNW pair — File: bidNW

```
\northhand{KJ82}{KQ9}{J}{AQJT8}
\southhand{AQT95}{A52}{864}{K6}
\easthand{63}{J764}{KQT9}{432}
\westhand{74}{T83}{A7532}{957}
\setdefaults{bidfirst=S}
\gamefont{\sffamily\bfseries\Large}
\begin{biddingpair}-(\explainit{splinter})
1S & 4D\markit \\
4H & 6S \\
\end{biddingpair}
\showNW+
```

♠ KJ82
♥ KQ9
♦ J
♣ AQJ108

♠ 74
♥ 1083
♦ A7532
♣ 957

N W E S

South	North
1♠	4♦[a]
4♥	6♠

[a] splinter

showNW pair centered — File: bidNW

```
\showNW*+
```

♠ KJ82
♥ KQ9
♦ J
♣ AQJ108

♠ 74
♥ 1083
♦ A7532
♣ 957

N W E S

South	North
1♠	4♦[a]
4♥	6♠

[a] splinter

showNW **File: bidNW**

```
\begin{bidding}-(\explainit{splinter}
\explainit{control})
1S        & p & 4D\markit & p \\
4H\markit & p & 6S        & p \\
\end{bidding}
\showNW+
```

♠ K J 8 2
♥ K Q 9
♦ J
♣ A Q J 10 8

♠ 7 4
♥ 10 8 3
♦ A 7 5 3 2
♣ 9 5 7

N W E S

South	West	North	East
1♠	p	4♦[a]	p
4♥[b]	p	6♠	p

[a] splinter [b] control

showNW centered **File: bidNW**

```
\showNW*+
```

♠ K J 8 2
♥ K Q 9
♦ J
♣ A Q J 10 8

♠ 7 4
♥ 10 8 3
♦ A 7 5 3 2
♣ 9 5 7

N W E S

South	West	North	East
1♠	p	4♦[a]	p
4♥[b]	p	6♠	p

[a] splinter [b] control

13 Legends

In this section we will investigate how we can add certain annotations to card diagrams. We start with `\newgame` and `\resetfonts` in order to 'forget the past'.

With `\dealer` one can denote which player is the dealer and with `\vulner` which side is vulnerable. This data is stored and with `\dealertext` (or `\vulnertext`) one can retrieve it. The macros `\leftupper` (and also the `right-` and the `lower-` versions) puts its 3 arguments, each on its own line, in the diagram. If you wonder why we use the command `\by` instead the text `by` in `\rightupper`: `\by` gets automatically translated into the active language.
If you look at the diagram, you will notice that the annotations can extend to the left of the **West** hand and the right of the **East** hand..

Annotations — **File: Legends**

```
\newgame\resetfonts
\northhand{AK43}{AJ98}{AQJ}{54}
\southhand{87}{QT5}{8432}{K986}
\easthand{JT6}{764}{KT9}{JT32}
\westhand{Q952}{K32}{765}{AQ7}
\dealer[\east]\vulner[\eastwest]
\leftupper{\dealertext}{}{\vulnertext}
\rightlower{}{\lead: \Di 7}{}
\rightupper{\contract: 3\,\NT}{\by \south}{}
\showAll
```

Dealer: East
Vul: East–West
Contract: 3 NT by South

♠ A K 4 3
♥ A J 9 8
♦ A Q J
♣ 5 4

♠ Q 9 5 2
♥ K 3 2
♦ 7 6 5
♣ A Q 7

N W E S

♠ J 10 6
♥ 7 6 4
♦ K 10 9
♣ J 10 3 2

♠ 8 7
♥ Q 10 5
♦ 8 4 3 2
♣ K 9 8 6

Lead: ♦7

In the next example we show all possible annotations. Here you can see that the `\upper`-versions align the text with the topline, whereas the `\lower`-versions align with the bottomline. Because the legendfont can differ from the gamefont and the rows in a hand get some extra space, the legend lines will normally not align with the rows of a hand.

We can add an offset (as shown in section showAll) to the **West** hand in order to make the hand align to the left with the left-upper legend. But this enlarges the gap between the **West** hand and the compass. It is perhaps better to have only very short legends. But it is up to you to decide that.

Legends: full overview — **File: Legends**

```
\leftupper{LUp:Line 1}{and line2}{last Line}
\rightupper{RUp:Line 1}{and line2}{last
    Line}
\leftlower{LLo:Line 1}{and line2}{last Line}
\rightlower{RLo:Line 1}{and line2}{last
    Line}
\headlinetext{Here you put some
    headtext\ldots\par on 2 lines}
\footlinetext{\ldots here goes foottext}
\showAll
```

Here you put some headtext...
on 2 lines

LUp:Line 1
and line2
last Line

RUp:Line 1
and line2
last Line

♠ A K 4 3
♥ A J 9 8
♦ A Q J
♣ 5 4

♠ Q 9 5 2
♥ K 3 2
♦ 7 6 5
♣ A Q 7

N W E S

♠ J 10 6
♥ 7 6 4
♦ K 10 9
♣ J 10 3 2

♠ 8 7
♥ Q 10 5
♦ 8 4 3 2
♣ K 9 8 6

LLo:Line 1
and line2
last Line

RLo:Line 1
and line2
last Line

...here goes foottext

The next examples show wich legends are output/suppressed for the other card diagrams. Note also that the head/foot-linetext does not extend to the width of the diagram, and can get real narrow when only the **N–S**-hands are shown. It might be better to put a `\raggedright` in. If you do so, then don't forget to `\protect` it.

Legends for: North–South: may need *raggedright* **File: Legends**

```
\showNS

\hrulefill

\headlinetext{\protect\raggedright Here you
    put some headtext\ldots\par on 2 lines}
\footlinetext{\protect\raggedright \ldots
    here goes foottext}
\showNS
```

Here you put some head-text... on 2 lines

♠ A K 4 3
♥ A J 9 8
♦ A Q J
♣ 5 4

N
W E
S

♠ 8 7
♥ Q 10 5
♦ 8 4 3 2
♣ K 9 8 6

...here goes foottext

Here you put some head-text... on 2 lines

♠ A K 4 3
♥ A J 9 8
♦ A Q J
♣ 5 4

N
W E
S

♠ 8 7
♥ Q 10 5
♦ 8 4 3 2
♣ K 9 8 6

...here goes foottext

Legends: North-East, North-West, East-West **File: Legends**

```
\showNE

\hrulefill

\showNW

\hrulefill

\showEW
```

Here you put some
headtext...
on 2 lines

♠ A K 4 3 RUp:Line 1
♥ A J 9 8 and line2
♦ A Q J last Line
♣ 5 4

N
W E
S

♠ J 10 6
♥ 7 6 4
♦ K 10 9
♣ J 10 3 2

...here goes foottext

Here you put some
headtext...
on 2 lines

LUp:Line 1 ♠ A K 4 3
and line2 ♥ A J 9 8
last Line ♦ A Q J
♣ 5 4

♠ Q 9 5 2
♥ K 3 2
♦ 7 6 5
♣ A Q 7

N
W E
S

...here goes foottext

Here you put some
headtext...
on 2 lines

♠ Q 9 5 2
♥ K 3 2
♦ 7 6 5
♣ A Q 7

N
W E
S

♠ J 10 6
♥ 7 6 4
♦ K 10 9
♣ J 10 3 2

...here goes foottext

14 Wrapping

The package OneDown renounces to implement so called *hanging hands*. To achieve such you will have to use external means, e.g. the package `wrapfig`. The advantage of an external package is that 1) you can wrap anything you like and 2) you have more control over the result. Here follow some examples to show how to do that.

You need a new paragraph before the `wrapfig` stuff. For details, refer to the documentation of the package `wrapfig`.

Wrapping a hand **File: Wrapping**

```
\blindtext

\begin{wraptable}{l}{0cm}% nat. width
\hand!{AQ852}{AKQ3}{-}{AQKJ}
\end{wraptable}
\blindtext
```

Hello, here is some text without a meaning. This text should show what a printed text will look like at this place. If you read this text, you will get no information. Really? Is there no information? Is there a difference between this text and some nonsense like "Huardest gefburn"? Kjift – not at all! A blind text like this gives you information about the selected font, how the letters are written and an impression of the look. This text should contain all letters of the alphabet and it should be written in of the original language. There is no need for special content, but the length of words should match the language.

♠ AQ852
♥ AKQ3
♦ –
♣ AQKJ

Hello, here is some text without a meaning. This text should show what a printed text will look like at this place. If you read this text, you will get no information. Really? Is there no information? Is there a difference between this text and some nonsense like "Huardest gefburn"? Kjift – not at all! A blind text like this gives you information about the selected font, how the letters are written and an impression of the look. This text should contain all letters of the alphabet and it should be written in of the original language. There is no need for special content, but the length of words should match the language.

Wrapping a bidding table

File: Wrapping

```
\blindtext

\begin{wraptable}{l}{0cm}% nat. width
\begin{biddingpair}
1S & 3S \\
4S & 5S \\
6S & p \\
\end{biddingpair}
\end{wraptable}
\blindtext
```

Hello, here is some text without a meaning. This text should show what a printed text will look like at this place. If you read this text, you will get no information. Really? Is there no information? Is there a difference between this text and some nonsense like “Huardest gefburn”? Kjift – not at all! A blind text like this gives you information about the selected font, how the letters are written and an impression of the look. This text should contain all letters of the alphabet and it should be written in of the original language. There is no need for special content, but the length of words should match the language.

South	North
1♠	3♠
4♠	5♠
6♠	p

Hello, here is some text without a meaning. This text should show what a printed text will look like at this place. If you read this text, you will get no information. Really? Is there no information? Is there a difference between this text and some nonsense like “Huardest gefburn”? Kjift – not at all! A blind text like this gives you information about the selected font, how the letters are written and an impression of the look. This text should contain all letters of the alphabet and it should be written in of the original language. There is no need for special content, but the length of words should match the language.

With a small diagram there is enough space for the wrapped text.

Wrapping a card diagram **File: Wrapping**

```
\newgame
\blindtext

\begin{wraptable}{l}{0cm}% nat. width
\gamefont{\sffamily\bfseries\footnotesize}
\northhand{AQ92}{873}{A54}{752}
\southhand{J7543}{Q42}{63}{AKQ}
\showNS
\end{wraptable}
\blindtext
```

Hello, here is some text without a meaning. This text should show what a printed text will look like at this place. If you read this text, you will get no information. Really? Is there no information? Is there a difference between this text and some nonsense like “Huardest gefburn”? Kjift – not at all! A blind text like this gives you information about the selected font, how the letters are written and an impression of the look. This text should contain all letters of the alphabet and it should be written in of the original language. There is no need for special content, but the length of words should match the language.

♠ AQ92
♥ 873
♦ A54
♣ 752

N
W E
S

♠ J7543
♥ Q42
♦ 63
♣ AKQ

Hello, here is some text without a meaning. This text should show what a printed text will look like at this place. If you read this text, you will get no information. Really? Is there no information? Is there a difference between this text and some nonsense like “Huardest gefburn”? Kjift – not at all! A blind text like this gives you information about the selected font, how the letters are written and an impression of the look. This text should contain all letters of the alphabet and it should be written in of the original language. There is no need for special content, but the length of words should match the language.

With real big diagrams there is not enough space for the wrapped text.

Show wrapping of hands, Large size **File: Wrapping**

```
Hello, here is some text without
a meaning. This text should show
what a printed text will look
like at this place. If you read
this text, you will get no
information.

\newgame
\resetfonts
\begin{wraptable}{l}{0cm}% nat. width
\northhand{AQ92}{873}{A54}{752}
\southhand{J7543}{Q42}{63}{AKQ}
\gamefont{\sffamily\bfseries\scalefont{2.5}}
\showNS
\end{wraptable}
\blindtext
```

Hello, here is some text without a meaning. This text should show what a printed text will look like at this place. If you read this text, you will get no information.

♠ AQ92
♥ 873
♦ A54
♣ 752

N
W E
S

♠ J7543
♥ Q42
♦ 63
♣ AKQ

Hello, here is some text without a meaning. This text should show what a printed text will look like at this place. If you read this text, you will get no information. Really? Is there no information? Is there a difference between this text and some nonsense like "Huardest gefburn"? Kjift – not at all! A blind text like this gives you information about the selected font, how the letters are written and an impression of the look. This text should contain all letters of the alphabet and it should be written in of the original language. There is no need for special content, but the length of words should match the language.

With `\raggedright` or `RaggedRight` from package `ragged2e` it looks much better.

Same, with RaggedRight **File: Wrapping**

```
\RaggedRight
Hello, here is some text without
a meaning. This text should show
what a printed text will look
like at this place. If you read
this text, you will get no
information.

\begin{wraptable}{l}{0cm}% nat. width
\showNS
\end{wraptable}
\blindtext
```

Hello, here is some text without a meaning. This text should show what a printed text will look like at this place. If you read this text, you will get no information.

♠ AQ92
♥ 873
♦ A54
♣ 752

N
W E
S

♠ J7543
♥ Q42
♦ 63
♣ AKQ

Hello, here is some text without a meaning. This text should show what a printed text will look like at this place. If you read this text, you will get no information. Really? Is there no information? Is there a difference between this text and some nonsense like "Huardest gefburn"? Kjift – not at all! A blind text like this gives you information about the selected font, how the letters are written and an impression of the look. This text should contain all letters of the alphabet and it should be written in of the original language. There is no need for special content, but the length of words should match the language.

15 Play

Here we show the playing tricks diagram. For the user, the environment `play` is like a 4 column table. Its mandatory argument denotes the player with the opening lead. With the optional argument the user can specify the trump suit. The default is `N` for **NT**. All leads must have a suit, although this is not checked by OneDown. If a suit is followed, you don't have to repeat the suit: a rank suffices to specify the card. Of course at discards or when ruffed, the suit must be entered too.

The `play` diagram has a special feature: it knows which player wins the trick and thus 1) you do not have to specify who has the lead, except of course the opening lead, and 2) it calculates (and displays) the tricks won by each side.

Playing tricks table. Trump is ♣ — **File: Play**

```
\newgame\resetfonts
\begin{play}{W}[C]
   H3  & 4  & K  & 6  \\
   C3  & 5  & Q  & 2  \\
   H5  & 2  & A  & 8  \\
   C7  & D9 & J  & K  \\
   S3  & 4  & Q  & 6 \\
   SA  & C4  & 2  & T  \\
\end{play}
```

№	Lead	2nd	3rd	4th	N S	E W
1	W: ♥3	4	K	6	0	1
2	E: ♣3	5	Q	2	0	2
3	W: ♥5	2	A	8	0	3
4	E: ♣7	♦9	J	K	1	3
5	N: ♠3	4	Q	6	2	3
6	S: ♠A	♣4	2	10	2	4

It is posible to use either the shorthands (`C, D, H, S`) for the suits as well as the code (e.g. `\Cl` itself, as you can see here. Refer to Bidding examples for further details.

In the environment `play` the consistency of the cards played is checked. As an example the error about card ♥5 (ocurring 2× in the same trick) is reported.

Same, but with suit commands — **File: Play**

```
\begin{play}{W}[C]
   \He3   & 4    & K  & 6  \\
   \Cl3   & 5    & Q  & 2  \\
   \He5   & 5    & A  & 8  \\
   \Cl7   & \Di9 & J  & K  \\
   \Sp3   & 4    & Q  & 6 \\
   \Sp A  & K    & 2  & T  \\
\end{play}
```

Error: Card ♥5 occurs 2 times

№	Lead	2nd	3rd	4th	N S	E W
1	W: ♥3	4	K	6	0	1
2	E: ♣3	5	Q	2	0	2
3	W: ♥5	5	A	8	0	3
4	E: ♣7	♦9	J	K	1	3
5	N: ♠3	4	Q	6	2	3
6	S: ♠A	K	2	10	3	3

In the next example for a **NT** contract, we have changed the language. Here the double occurence of ♣6 in two different tricks is shown.

Playing tricks table for NT in Dutch — **File: Play**

```
\begin{otherlanguage}{dutch}
\begin{play}{W}
 C3  & Q   & K   & 2  \\
 SJ  & A   & 4   & 2  \\
 C4  & 6   & T   & 5  \\
 CA  & ST  & 6   & 9  \\
 C7  & HT  & D5  & S5 \\
 D2  & T   & 3   & 4  \\
\end{play}
\end{otherlanguage}
```

Error: Card ♣6 occurs 2 times

№	Uitk.	2de	3de	4de	N Z	O W
1	W: ♣3	V	H	2	0	1
2	O: ♠B	A	4	2	1	1
3	Z: ♣4	6	10	5	2	1
4	N: ♣A	♠10	6	9	3	1
5	N: ♣7	♥10	♦5	♠5	4	1
6	N: ♦2	10	3	4	4	2

The same table in German

File: Play

```
\begin{otherlanguage}{german}
\begin{play}{W}
 C3  & Q   & K   & 2  \\
 SJ  & A   & 4   & 2  \\
 C4  & 6   & T   & 5  \\
 CA  & ST  & 6   & 9  \\
 C7  & HT  & D5  & S5 \\
 D2  & T   & 3   & 4  \\
\end{play}
\end{otherlanguage}
```

Error: Card ♣6 occurs 2 times

№	Aussp.	2.	3.	4.	N S	O W
1	W: ♣3	D	K	2	0	1
2	O: ♠B	A	4	2	1	1
3	S: ♣4	6	10	5	2	1
4	N: ♣A	♠10	6	9	3	1
5	N: ♣7	♥10	♦5	♠5	4	1
6	N: ♦2	10	3	4	4	2

16 ExpertQuiz

A special feature of OneDown is the so called `expertquiz`. It essentially displays a hand with a (partial) bidding sequence. The reader has to guess the best next bid with respect to the hand and the bidding so far. The different answers are rewarded with points.

Observe the token '-' in `\hand-` and `\begin{bidding}-` that suppresses the output.

With the optional argument we add some extra information to the quiz.

expertquiz — **File: ExpertQuiz**

```
\newgame\setdefaults{bidfirst=W}
\dealer[\east]\vulner[\eastwest]
\hand!-{Q952}{K32}{765}{AQ7}
\begin{bidding}-(\explainit{gameforcing}
 \explainit{natural, 6-card})%
  &    & 2D\markit & 2H\markit \\
p & 3H & 4D        & p \\
? \\
\end{bidding}
\expertquiz[Team: \dealertext,
    \vulnertext]{%
  4\He= 10, 4\Sp= 7,
  6\Di= 4,
  4\NT/5\NT= 3, 5\Di=~1
}
```

Team: **Dealer**: **East**, **Vul**: **East–West**

♠ Q 9 5 2
♥ K 3 2
♦ 7 6 5
♣ A Q 7

West	North	East	South
		2♦[a]	2♥[b]
p	3♥	4♦	p
?			

[a] gameforcing [b] natural, 6-card

Award: 4♥= 10, 4♠= 7, 6♦= 4, 4**NT**/5**NT**= 3, 5♦= 1

Here we show the same quiz, but the layout resembles the one used by the DBV[1] in their monthly, called *Bridge Magazin*. We get this special layout by using the token '**!**'. Of course we set it in the German language.

expert quiz a la DBV — **File: ExpertQuiz**

```
\begin{otherlanguage}{german}
\expertquiz![Team: \dealertext,
    \vulnertext]{%
  4\He= 10, 4\Sp= 7,
  6\Di= 4,
  4\NT/5\NT= 3, 5\Di= 1
}
\end{otherlanguage}
```

Team: **Teiler**: **Ost**, **Gef**: **Ost–West**

♠ Q 9 5 2
♥ K 3 2
♦ 7 6 5
♣ A Q 7

West	North	East	South
		2♦[a]	2♥[b]
p	3♥	4♦	p
?			

[a] gameforcing [b] natural, 6-card

Bewertung: 4♥= 10, 4♠= 7, 6♦= 4, 4**SA**/5**SA**= 3, 5♦= 1

[1] German Bridge League

17 Languages

As a demonstration of the multilingual features of the OneDown package we show a diagram with turkish annotations.
Note:
Due to an quirk in the babel implementation of the turkish and some other language, you must either call `\shorthandoff{=!}` after loading the language, or load it with e.g.
`\usepackage[turkish,shorthands=]{babel}`.

Refer to the OneDown manual for details.

Languages (Turkish) — **File: Languages**

```
\boardnr{32}
\northhand{AK43}{AJ98}{AQJ8}{4}
\southhand{87}{QT5}{432}{K9865}
\easthand{JT6}{764}{KT9}{JT32}
\westhand{Q952}{K32}{765}{AQ7}
\leftupper{\boardtext*}%
  {\dealertext}{\vulnertext}
\rightupper[1ex]{\contract: }%
  {3\,\NT}{\by \south}
\rightlower[1ex]{\lead: \Di 7}{}{}
\begin{otherlanguage}{turkish}
\showAll*
\end{otherlanguage}
```

Oyun Tahtası: 32
Dağıtan: B
Zon: D–B

♠ A P 4 3
♥ A V 9 8
♦ A K V 8
♣ 4

Kontrat:
3 SA
tarafından Güney

♠ K 9 5 2
♥ P 3 2
♦ 7 6 5
♣ A K 7

K
B D
G

♠ V 10 6
♥ 7 6 4
♦ P 10 9
♣ V 10 3 2

♠ 8 7
♥ K 10 5
♦ 4 3 2
♣ P 9 8 6 5

Atak: ♦7

Here we switch to the Norwegian language. As we use the same settings for the diagram, we simply call `\showAll` to display it, after we changed the language. The Jack is coded with Kn rather thaj J, so the hand is now closer to the right upper legend.

Languages (Norwegian) — **File: Languages**

```
\begin{otherlanguage}{norsk}
\showAll*
\end{otherlanguage}
```

Spill: 32
Giver: V
Sone: Ø–V

♠ E K 4 3
♥ E Kn 9 8
♦ E D Kn 8
♣ 4

Kontrakt:
3 NT
ved Syd

♠ D 9 5 2
♥ K 3 2
♦ 7 6 5
♣ E D 7

N
V Ø
S

♠ Kn 10 6
♥ 7 6 4
♦ K 10 9
♣ Kn 10 3 2

♠ 8 7
♥ D 10 5
♦ 4 3 2
♣ K 9 8 6 5

Utspill: ♦7

18 Compass

Here we show the 16 possible combinations of dealership and vulnerability. We use the default `colors=2` (`black & red`) and so the vulners appear in red. The command `\CP` is defined in the preamble.

The 16 combinations of dealer/vulner **File: Compass**

```
\centering
\setdefaults{compsize=1.3,compmid=\boardtext}
\begin{tabular}{ll|ll}
\forloop{Nr}{1}{\value{Nr} < 9}{%
  \boardnr{\theNr} \theNr: \dealertext\vulnertext  & \CP &%
  \setcounter{Tmp}{8 + \theNr}%
  \boardnr{\theTmp} \theTmp: \dealertext\vulnertext & \CP \\
}
\end{tabular}
```

1: **Dealer: N Vul: None**	N W 1 E S	9: **Dealer: N Vul: E–W**	N W 9 E S
2: **Dealer: E Vul: N–S**	N W 2 E S	10: **Dealer: E Vul: All**	N W 10 E S
3: **Dealer: S Vul: E–W**	N W 3 E S	11: **Dealer: S Vul: None**	N W 11 E S
4: **Dealer: W Vul: All**	N W 4 E S	12: **Dealer: W Vul: N–S**	N W 12 E S
5: **Dealer: N Vul: N–S**	N W 5 E S	13: **Dealer: N Vul: All**	N W 13 E S
6: **Dealer: E Vul: E–W**	N W 6 E S	14: **Dealer: E Vul: None**	N W 14 E S
7: **Dealer: S Vul: All**	N W 7 E S	15: **Dealer: S Vul: N–S**	N W 15 E S
8: **Dealer: W Vul: None**	N W 8 E S	16: **Dealer: W Vul: E–W**	N W 16 E S

With `\setdefaults` we can influence the look of the compass in detail. The keys that control this are `compline` to set the thickness of the frame, `compshow` to hide/show the compass, `compsize` to multiply the compass size with a factor and `compturn` with which the letter 'E' and 'W' can be rotated over 90°. With the key `compass` one can set the font that is used for the letters in the compass.

First we enlarge the compass 1.5×. Note that this does influence neither the fontsize nor the frame thickness. Then we enlarge the fonsize. As you see, this does influence the size of the compass too. Finally the set the size factor back to 1. Notice the difference with the second compass.

controlling the compass I — **File: Compass**

```
\CP
\setdefaults{compsize=1.5}\CP
\setdefaults*{compass=\Large}\CP
\setdefaults{compsize=1}\CP
```

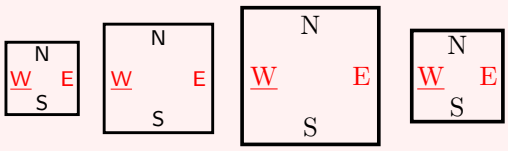

As you see, we can make the frame very thick, very thin or let it disappear completely when we use factor 0.

controlling the compass II — **File: Compass**

```
\setdefaults{compsize=1.5}\CP
\setdefaults{compline=3}\CP
\setdefaults{compline=0.1}\CP
\setdefaults{compline=0}\CP
```

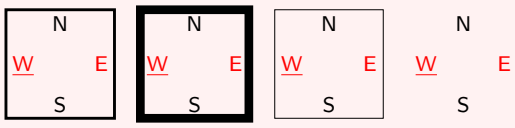

If you watch the first compass carefully, you'll notice (maybe you must enlarge it to see what is meant) that the small `x` is exactly in the middle of the compass. Nevertheless the impressesion is that the `x` is closer to the 'W'. This is because a 'W' is wider than an 'E'. It simply looks unbalanced. We can diminish this by enlarging the compass. Another trick is to rotate the `W` and `E` 90°, as shown in the third compass. In the second line we see a diagram with compass, but its frame is supressed. Finally we see a diagram where the total compass is suppressed. For clarity's sake we have added the **East** and **West** hand.

controlling the compass III — **File: Compass**

```
\boardnr{0}
\setdefaults{compsize=1,compmid=x}\CP
\setdefaults{compsize=1.5}\CP
\setdefaults{compsize=1,compturn=on}\CP
\setdefaults{compturn=off,compline=0}
\gamefont{\footnotesize}
\easthand{JT6}{764}{K43}{JT32}
\westhand{Q952}{K92}{762}{AQ7}
\showEW\hfill
\setdefaults{compshow=off}
\showEW
```

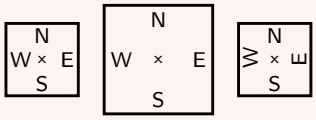

♠ Q 9 5 2	♠ J 10 6	♠ Q 9 5 2	♠ J 10 6
♥ K 9 2	♥ 7 6 4	♥ K 9 2	♥ 7 6 4
♦ 7 6 2	♦ K 4 3	♦ 7 6 2	♦ K 4 3
♣ A Q 7	♣ J 10 3 2	♣ A Q 7	♣ J 10 3 2

N
W × E
S

On the next page we show the compass for all available sizes. In order to get all diagrams in one color box, we combined the smallest with the largest etc. The first line gets out of the frame, but you'll get the idea all the same. Using `\scalefont` you can get even bigger diagrams.

onesuitAll for all sizes **File: Compass**
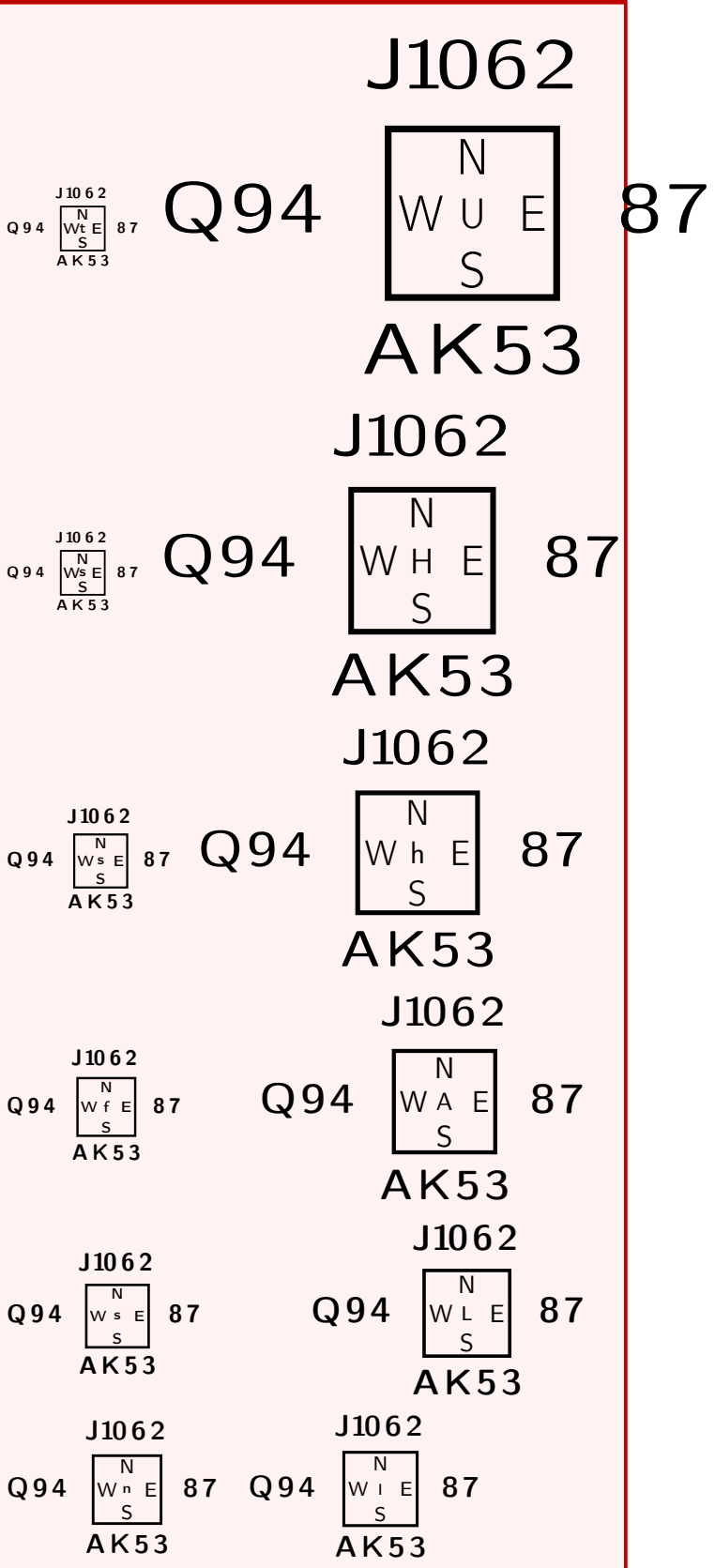
```
\setdefaults{compshow=on}
\gamefont{\sffamily\bfseries\tiny}
\setdefaults{compmid=t}
\onesuitAll!{JT62}{AK53}{87}{Q94}
\gamefont{\sffamily\bfseries\HUGE}
\setdefaults{compmid=U}
\onesuitAll!{JT62}{AK53}{87}{Q94}
%
\gamefont{\sffamily\bfseries\ssmall}
\setdefaults{compmid=s}
\onesuitAll!{JT62}{AK53}{87}{Q94}
\gamefont{\sffamily\bfseries\Huge}
\setdefaults{compmid=H}
\onesuitAll!{JT62}{AK53}{87}{Q94}
%
\gamefont{\sffamily\bfseries\scriptsize}
\setdefaults{compmid=s}
\onesuitAll!{JT62}{AK53}{87}{Q94}
\gamefont{\sffamily\bfseries\huge}
\setdefaults{compmid=h}
\onesuitAll!{JT62}{AK53}{87}{Q94}
%
\gamefont{\sffamily\bfseries\footnotesize}
\setdefaults{compmid=f}
\onesuitAll!{JT62}{AK53}{87}{Q94}
\gamefont{\sffamily\bfseries\LARGE}
\setdefaults{compmid=A}
\onesuitAll!{JT62}{AK53}{87}{Q94}
%
\gamefont{\sffamily\bfseries\small}
\setdefaults{compmid=s}
\onesuitAll!{JT62}{AK53}{87}{Q94}
\gamefont{\sffamily\bfseries\Large}
\setdefaults{compmid=L}
\onesuitAll!{JT62}{AK53}{87}{Q94}
%
\gamefont{\sffamily\bfseries\normalsize}
\setdefaults{compmid=n}
\onesuitAll!{JT62}{AK53}{87}{Q94}
\gamefont{\sffamily\bfseries\large}
\setdefaults{compmid=l}
\onesuitAll!{JT62}{AK53}{87}{Q94}
\setdefaults{compmid=}
```